XSEL™ Process Gauge - Stainless Steel
Type 232.34 - Dry Case
Type 233.34 - Liquid-filled Case

Applications

- For applications with high dynamic pressure pulsations or vibration a liquid filled case and socket restrictor are available
- Suitable for corrosive environments and gaseous or liquid media that will not obstruct the pressure system
- Process industry: chemical/petrochemical, power stations, mining, on and offshore, environmental technology, mechanical engineering and plant construction

Special features

- Excellent load-cycle stability and shock resistance
- Solid front thermoplastic case
- Positive pressure ranges to 30,000 psi
- XSEL™ Process Gauge with 5 year warranty on gauge and 10 year warranty on pressure system (see terms and condition
- All lower mount connection gauges are factory prepared for liquid filling

(LBM: must install membrane prior to field filling)

Bourdon Tube Pressure Gauge Model 232.34

Standard Features

Design
ASME B40.100

Sizes
4½" & 6" (115 & 160 mm) dial size

Accuracy class
± 0.5% of span (ASME B40.100 Grade 2A)
± 1.0% of span (ASME B40.100 Grade 1A)
(for 20,000 psi range and above)

Ranges
Vacuum / Compound to 200 psi
Pressure from 15 psi to 30,000 psi
or other equivalent units of pressure or vacuum

Working pressure

Steady:	full scale value
Fluctuating:	0.9 x full scale value
Short time:	1.5 x full scale value

Operating temperature
Ambient: -40°F to +150°F (-40°C to +66°C) - dry
-4°F to +150°F (-20°C to +66°C) - glycerine filled
-40°F to +150°F (-40°C to +66°C) - silicone filled
Medium: max. +212°F (+100°C) (See Note 1 on reverse)

Temperature error
Additional error when temperature changes from reference temperature of 68°F (20°C) ±0.4% for every 18°F (10°C) rising or falling. Percentage of span.

Weather protection
Weather resistant (NEMA 3 / IP54) - without membrane
Weather tight (NEMA 4X / IP65) - dry case or filled case with membrane installed

Pressure connection
Material: 316L stainless steel
Lower mount (LM) or lower back mount (LBM)
1/4" or 1/2" NPT with M4 internal tap

Restrictor
Material: Stainless steel (0.6 mm)

Bourdon tube
Material: 316L stainless steel
≤ 1,000 PSI: C-type
≥ 1,500 PSI: helical type

Movement
Stainless steel. Internal stop pin at 1.3 x full scale
Overload and underload stops - standard
Dampened movement - optional

Dial
White aluminum with black lettering, stop pin at 6 o'clock

Pointer
Black aluminum, adjustable

Case
Black fiberglass-reinforced thermoplastic (POCAN)
Solid front, blowout back
Turret-style case with built in rear flange lugs

INSTRUMENTS • CONTROLS • VALVES
ARCO Engineering, Inc.
SINCE 1954
www.arcoengineering.com
3317 Gilmore Industrial Blvd.
Louisville, KY 40213
Ph: (502) 966-3134
Fx: (502) 966-3135

WIKA®
Part of your business

Window
Clear acrylic with Buna-N gasket

Case filling
Glycerine 99.7% - Type 233.34

Cycle testing
400,000 - 2,000,000* cycles, depending upon pressure range

* Liquid filled

Note 1: The maximum continuous media temperature for this gauge is 212°F. However, higher temperatures can be maintained safely for short term exposure per table to the right. The user should consider temperature error and gauge component degradation when exposing gauge to any media or ambient temperature above 212°F. For continuous use in either ambient or media temperatures above 212°F, a diaphragm seal or other heat dissipating means is recommended. Consult factory for technical inquiries and application assistance.

Optional extras

- Silicone dampened movement
- Panel mounting adaptor kit (field assembled)
- Silicone case filling
- Halocarbon case filling
- Cleaned for oxygen service
- Instrument glass or safety glass window
- Drag pointer (maximum reading indicator)
- Alarm contacts switches (magnetic or inductive)
- Special process connections
- Custom dial layout
- External zero adjustment

Short term, intermittent maximum media temperature limits
(Optional glass window required for all these temperatures)

500°F (260 °C) -	Dry Gauge
250°F (130°C) -	Liquid filled gauge
300°F (150°C) -	Dampened movement gauge

Dimensions

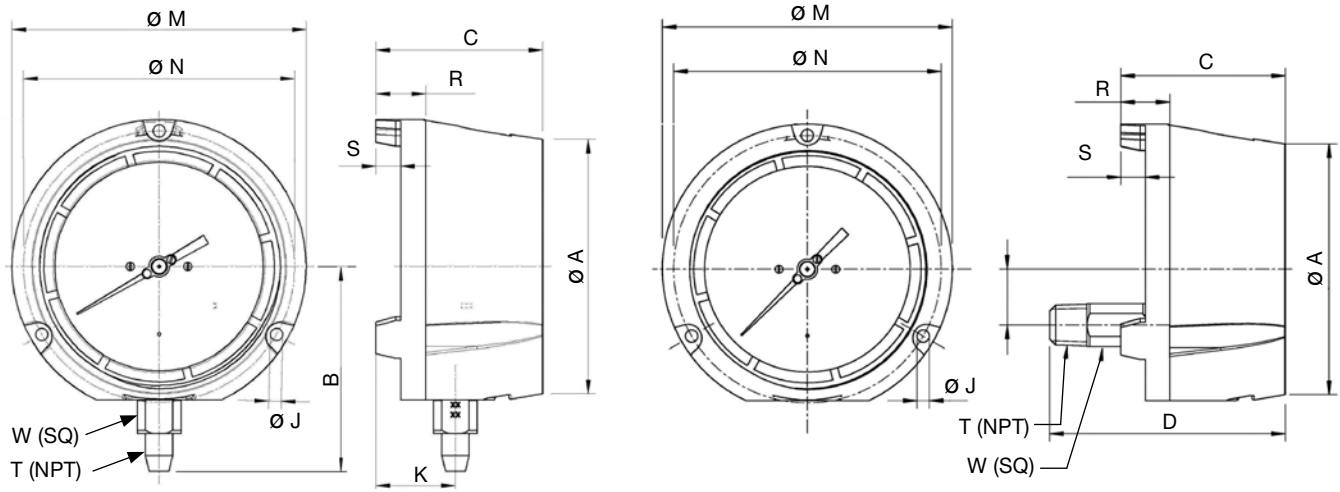

Size		A	B	C	D	J	K	L	M	N	R	S	T	W	Weight[1]	
4.5”	mm	128	103	84	120.3	6.3	40	28.5	148	136.5	25	12.5		22	2 lb.	dry
	in	5	4.06	3.31	4.74	0.248	1.57	1.12	5.83	5.37	0.99	0.49	1/2”	0.87	3 lb.	filled
6”	mm	164	122.5	88	123.4	7.1	40.2	28.5	190	177.8	25.4	12.7		22	3 lb.	dry
	in	6.46	4.82	3.46	4.86	0.28	1.58	1.12	7.5	7	1	0.5	1/2”	0.87	4 lb.	filled

[1] Weight without optional accessories

Ordering information
Pressure gauge model / Nominal size / Scale range / Size of connection / Optional extras required
Specifications and dimensions given in this leaflet represent the state of engineering at the time of printing.
Modifications may take place and materials specified may be replaced by others without prior notice.

WIKA®
INSTRUMENTS • CONTROLS • VALVES
ARCO Engineering, Inc. SINCE 1954
www.arcoengineering.com
3317 Gilmore Industrial Blvd.
Louisville, KY 40213
Ph: (502) 966-3134
Fx: (502) 966-3135